22.51

11.63

U-7

NOTRE DAME

1/32 PLY DOUBLER

REMOVABLE HATCH OUTLINE

RECEIVER

1/32 PLY DOUBLER

RUDDER SERVO

DARK BLUE LOGO AND STRIPES

A B C D E F

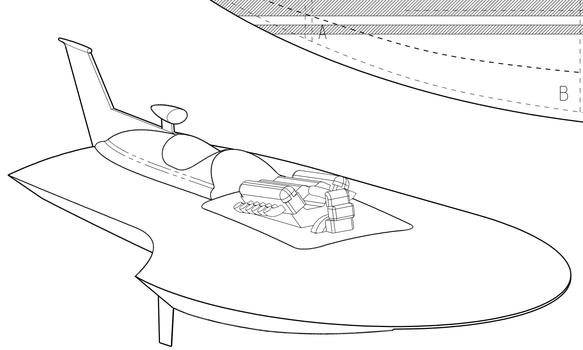

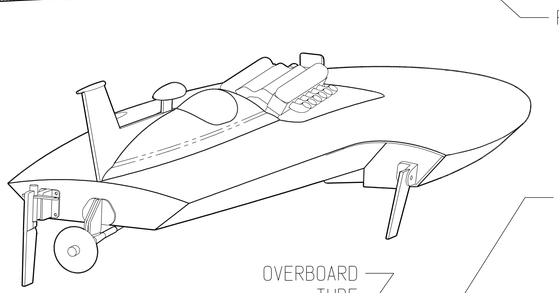

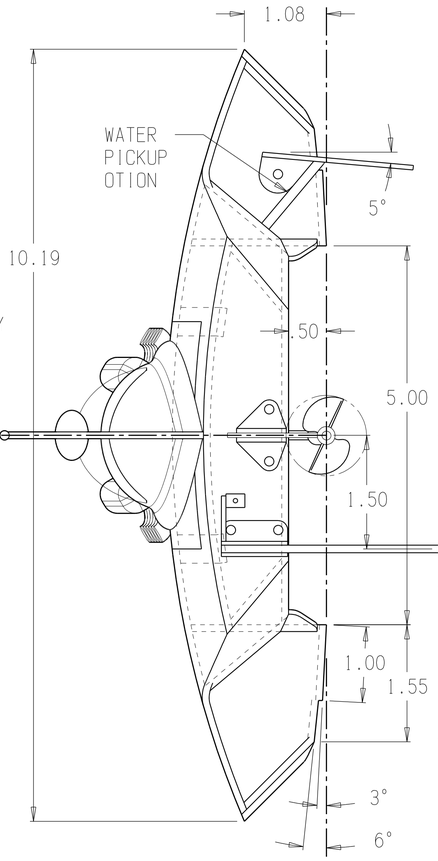

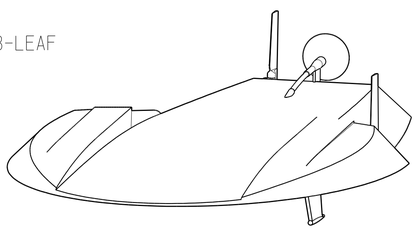

12 TURN BRUSHED or 4200 - 5300 KV BRUSHLESS MOTOR

6 - CELL PACK

1/16 WIRE DRIVE

OVERBOARD TUBE

HOLLOW OUT COWLING

BLUE TRIM

GREEN 3-LEAF CLOVER

1.50

13.0°

1.00

.90

4.0°

1/2 X 3/32 BALSA FLOOR BRACE

1.50

MOTOR SPEED CONTROL

1/32 PLY DOUBLER

1/8 TO 1/16 COUPLER

4.0°

.50

OCTURA X427-X430

OC4WRA RUDDER

ORIGINAL DESIGN: ED KARELSON
1/8th SCALE DRAWING BY:
ROGER NEWTON
www.newtonmarine.com (PLAN #101E)

1/16th SCALE
1969 U-7 NOTRE DAME
UNLIMITED HYDROPLANE

12/22/05 by: G.Finlay